ILLUMRA™
SELF-POWERED WIRELESS CONTROLS

Installation Guide

3-Wire Relay Receiver

E3R-R02-3HOBP (24V)
E3R-R12-3HOBP (120V)
E3R-R24-3HOBP (240V)
E3R-R27-3HOBP (277V)

E3R-R02-3HOTP (24V)
E3R-R12-3HOTP (120V)
E3R-R24-3HOTP (240V)
E3R-R27-3HOTP (277V)

Overview

The 3-Wire Relay Receiver provides fast and simple installation of wireless controls for lighting and other loads. The receiver responds to radio signals from self-powered wireless light switches and other compatible transmitters. The receiver mounts in ceiling junction boxes, wall switch boxes, and wiring cavities. The threaded version mounts through standard 1/2inch knock-out holes.

Compatible Devices

- Single Rocker Self-powered Wireless Light Switch; E3T-S1Axx
- Dual Rocker Self-powered Wireless Light Switch; E3T-S2Axx
- Handheld Self-powered Wireless Light Switch; E3T-S2Hxx
- Key Card Access Switch; E3T-C2AWH
- SLT Wireless Sensor; E3T-Rxx-2INBP
- Self-powered Wireless Occupancy Sensor; E3T-Mxx-SB24
- More transmitters available

-3HOBP

-3HOTP

Components Included

The following items are included with this product:
- A -- (1) ILLUMRA 3-wire Relay Receiver

Tools Needed for Installation

- Pencil or ball point pen
- Electrical tape
- Wire nuts
- Screw driver

Installation

CAUTION/NOTES:
WARNING: To avoid risk of fire, shock, or death, TURN OFF POWER at circuit breaker or fuse and verify that it is OFF before installation begins. Make sure that it remains OFF until installation is complete. Please be aware that with some versions of the product, it is possible to have multiple branch circuits feeding the Relay Receiver.

- Depending on circumstances, it may be convenient to pre-teach the receiver prior to final installation.
- Always follow local electrical codes when installing this device. Installation should be performed by a qualified electrician.
- ILLUMRA Relay Receivers are intended only for use indoors, in dry locations, and with permanantly installed fixtures.
- **ILLUMRA Relay Receivers should NOT be installed in a location where the unit will be in close proximity to the light bulb(s) or other sources of heat, such as above a ceiling hugger fixture, particularly with higher wattage loads. (See "Operating Temperature" on specifications table.)**

Teach/Learn Procedure (a Transmitter *teaches* a Receiver, a Receiver *learns* a Transmitter)

The receiver must be powered when teaching. After teaching a receiver, settings are retained when power is disconnected. The receiver sensitivity is reduced when in Learn Mode to prevent unintentionally teaching unwanted transmitters to the receiver. Transmitters should be within 15 feet (5 meters) of the receiver when teaching. Teach the receiver in any of the modes below.

Note: When the device is not in a learn mode and is operational, the CLR button can be pressed briefly to toggle the output. This is convenient when learning in the Scene Mode (See Below).

Step 1: Determine the Desired Behavior

= Press and Release = Press and Hold = Release

★ = most popular behavior

	SWITCHES	OCCUPANCY SENSOR	KEY CARD READER	VING(TM) CARD READER	SLT	MAGNETIC SENSOR
Learn Mode 1	★ ROCKER Top of the rocker turns on load. Bottom of the rocker turns off load. Teach either the top or the bottom; the other half is automatically taught.	MANUAL ON/ ★ AUTO OFF 15 min Turn on load manually. Load turns off automatically if no motion is sensed for 15 minutes. California Title-24 compliant.	FUTURE USE	FUTURE USE	★A-B CIRCUIT INTERLOCK POWER POWER SLT SLT When SLT is energized by circuit A, load on circuit B turns on. When SLT is de-energized by circuit A, load on circuit B turns off.	★ OPEN-OFF, CLOSED-ON Magnet Normally used to disable HVAC if a door or window is open.
Learn Mode 2	MOMENTARY Press and hold one side of the rocker to turn on load. Release to turn off. Each side of the rocker must be learned separately.	AUTO ON/ AUTO OFF 15 min Load turns on automatically if motion is sensed. Load turns off automatically if no motion is sensed for 15 minutes.	★ HOTEL GUEST CARD Insert card to turn on load. Remove card to turn off load. Works with all seven punch patterns.	★ HOTEL GUEST CARD Insert card to turn on load. Remove card to turn off load.	FUTURE USE	FUTURE USE
Learn Mode 3	TOGGLE Press/release once to turn on load. Press/ relese again to turn off. Each side of the rocker must be learned separately.	WALK THROUGH 2-15 min Load turns on automatically when motion is sensed. Load turns off automatically if no motion is sensed for 2-15 minutes. Very aggressive energy-saving timer.	FUTURE USE	FUTURE USE	FUTURE USE	FUTURE USE
Learn Mode 4	SCENE Press/release one side of the rocker to recall a preset scene that can involve multiple loads. Each side of rocker must be taught separately.	FUTURE USE	FUTURE USE	FUTURE USE	FUTURE USE	FUTURE USE

Scene Mode: Scene mode is used to teach a receiver to recall a specific relay state when a transmitter (which has been taught to the receiver) is triggered. Typically, scene mode is used when you want a signal transmitter action to affect multiple receivers in which some recivers turn on and others turn off with a single button press. To teach a receiver to recall a specific relay state, set the receiver to the desired state by quickly pressing the CLR button (which will cause the relay to toggle each time the CLR button is pressed). Once the receiver is in the desired lighting state, enter learn mode 4 by following the instructions in step two, which will complete the learn process.

Step 2: Teach the Receiver

Clear All Instructions: The CLR button can be used to clear all of the memory in the receiver (erases all previously learned transmitters). Press and hold the clear button (CLR) for several seconds. When the light starts to blink, this indicates that the memory has been cleared and that the receiver is in learn mode 1 .

Figure A: Enter Learn Mode

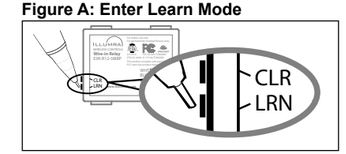

PART	ACTION	RESULT	NOTES
(A) Enter Learn Mode 1	LRN CLR Press LRN 1 SEC, Release	1 Device Output flashes pattern.	Up to 30 transmitter can be learned by each receiver. To do this, learn each transmitter as explained to the left.
(B) Select Learn Mode Skip this step if you wish to use Learn Mode 1	LRN CLR Press LRN 3 SEC, Release This advances to Learn Mode 2. Repeat to advance to Learn Mode 3 or 4.	2 3 4	
(C) Learn Transmitter	Press "Teach" button **ONCE** for normal operation, or **TWICE** in one second for master switch operation	3 SEC Resume Blinking Normal 3 SEC Resume Blinking Master Learn indication light is on for three seconds, then resumes blinking Learn Mode Pattern. Transmitter has been learned. Learn another transmitter (Part C), select another mode (Part B), or exit (Part D).	After the 3 second learn (light on) indication, teach another transmitter, and so on. A transmitter can also be unlearned by a receiver by repeating part C. Instead of a 3 second learn indication (light on) the receiver will give a 3 second unlearn indication (light off).
(D) Exit Configuration	Wait 30 SEC (or press LRN 2 SEC, Release)	Lights stop blinking. Device is configured and ready to use.	Step 2 can be used for all transmitters including: Motion Sensors, Door Sensors, SLT, etc.

Step 3: (Optional) Activate Other Features

PART	ACTION	RESULT	NOTES
(A) Turn power to relay off		It is important to understand that the entire device needs to be powered down. This can be done with a switch or breaker, or other means.	This may be a difficult task as the CLR/LRN button needs to be held pressed while powering up the device. This is easiestly done before installation or with two people. As the device powers up the output will blink twice, quickly, then will switch one last time as the CLR/LRN button is released. If this process is repeated the output will invert back to its original state and will only blick once instead of twice, then once more as the CLR/LRN button is released just as it did the first time.
(B) Press and hold CLR While... Turn power to relay on with CLR held	LRN CLR Hold CLR 3 SEC, Release	**Invert Ouput Feature** In the default configuration, the N.O. relay contact is open (not connected) when not active, and closed (connected) when active. When the outputs are in Inverted Output Mode, the N.O. contact is closed when not active and open when active. Inverting the outputs may be used to emulate a normally closed relay that opens when a switch is activated. Release (Inverted) 1→0 0→1 Release (Not Inverted) 1→1 0→0	

Master Switch: When a transmitter is learned by a receiver as a master switch, it enables and disables all other transmitters learned by the same receiver. When a receiver is enabled by a master transmitter, the receiver responds to all other learned transmitters. When the receiver is disabled by a master switch, the receiver will turn off its load and will not respond to other learned transmitters. However, when a receiver has been disabled by a master switch, it keeps track of commands from other learned transmitters so that when a master switch enables the receiver, the recevier will switch its load to the state last determined by the other learned transmitters.

Copyright © 2010 ILLUMRA. All rights reserved.
Contact ILLUMRA: T: (801) 349-1200 | F: (801) 653-4257 | Info@ILLUMRA.com | www.ILLUMRA.com

Specifications

		E3R-R02-3HOBP E3R-R02-3HOTP	E3R-R12-3HOBP E3R-R12-3HOTP	E3R-R24-3HOBP E3R-R24-3HOTP	E3R-R27-3OHBP E3R-R27-3OHTP
Range		50-150 feet (typical)			
Frequency		315 MHz			
Relay Output		24 VAC	120 VAC	240 VAC	277 VAC
Max Loads/ Contact Ratings	**Tungsten / Incandescent**	100 W	500 W	1000 W	1150 W
	Fluorescent Ballast	3 A			
	General Duty	6 A			
	A300 Pilot Duty	24 VA	120 VA	240 VA	277 VA
Power Supply		24 VAC 50/60 Hz	120 VAC 50/60 Hz	240 VAC 50/60 Hz	277 VAC 50/60 Hz
Output Channels		1 FORM A Relay			
Memory		Stores up to 30 switch IDs			
Dimensions		2.11 x 1.73 x 1.09 inches (54 x 44 x 28 mm)			
Operating Temperature		14° to +122°F (-10° to +50°C)			
Storage Temperature		-4° to +176°F (-20° to +80°C)			
Radio Certification		FCC (United States): SZV-TCM2XXC I.C. (Canada): 5713A-TCM2XXC			
Safety Approval		ETL (U.S.): UL244A ETL (Canada): CSAC22.2#14-05			

Diagrams

Figure C: Single Pole or Multi-way Wireless Switch (1 or more wireless light switches)

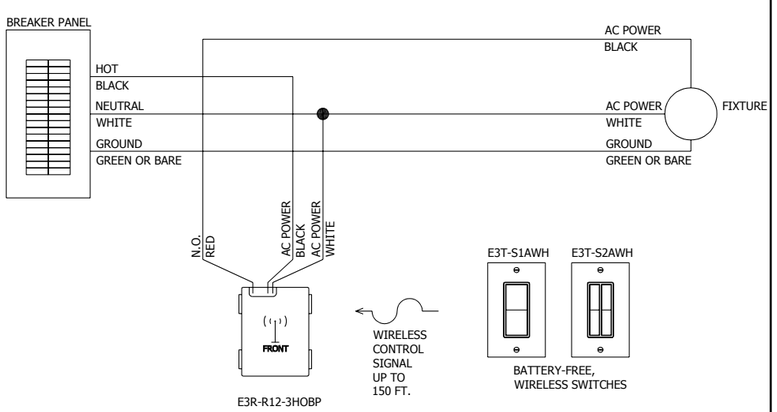

Figure D: Single Pole or Multi-way Wireless Switch (277V)

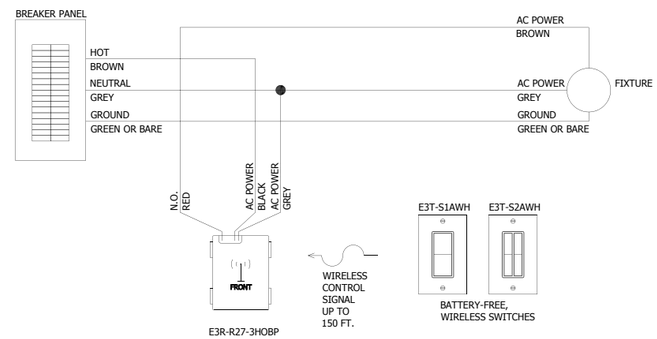

Figure E: Generator Disconnect

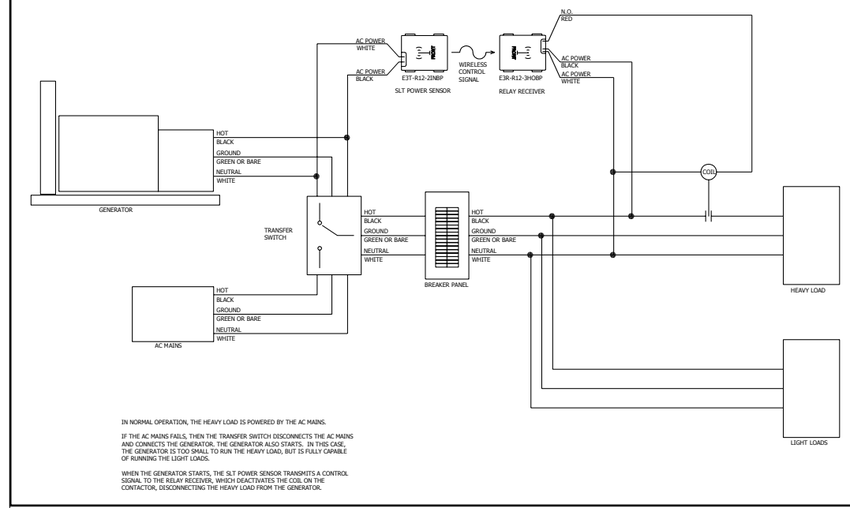

Contains FCC ID: SZV-TCM2XXC
Contains IC: 5713A-TCM2XXC
The enclosed device complies with Part 15 of the FCC Rules. Operation is subject to the following two conditions: (i.) this device may not cause harmful interference and (ii.) this device must accept any interference received, including interference that may cause undesired operation.

ETL (US) – Conforms to UL STD 244A. This device was tested according to and was found to comply with UL 244A Solid State Controls for Appliances and UL 2043 UL Standard for Safety Fire Test for Heat and Visible Smoke Release for Discrete Products and Their Accessories Installed in Air-Handling Spaces.

ETL (Canada) – Certified to CAN/CSA STD C22.2 No. 14-05. This device was tested according to and was found to comply with CAN/CSA STD C22.2 No. 14-05.

enocean alliance
No Wires. No Batteries. No Limits.

This device or certain aspects thereof is protected by at least one U.S. or international patent or has at least one such patent application pending.

ILLUMRA is a trademark of Ad Hoc Electronics, LLC. Other trademarks herein are the property of their respective owners.

Copyright © 2010 ILLUMRA. All rights reserved.

Contact ILLUMRA: T: (801) 349-1200 | F: (801) 653-4257 | Info@ILLUMRA.com | www.ILLUMRA.com